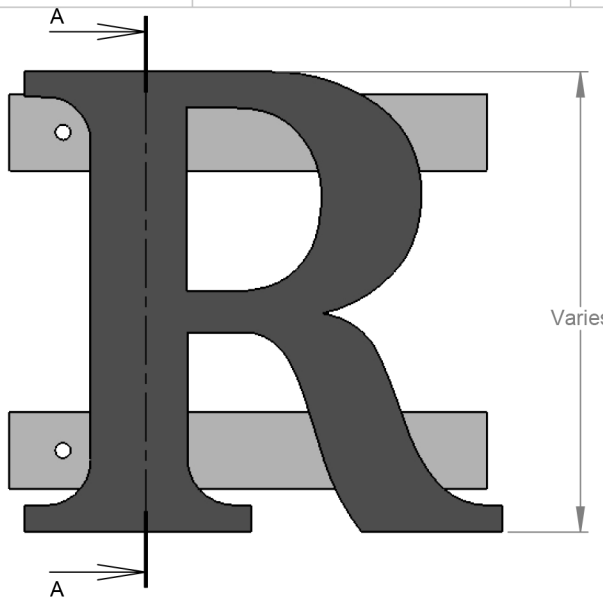

FRONT VIEW II SCALE 1:2.5

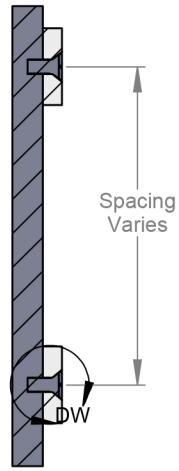

SECTION VIEW A-A II SCALE 1:2.5

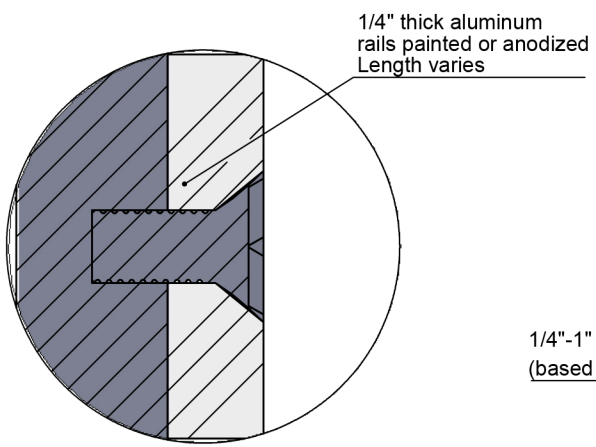

DETAIL DW II SCALE 2:1

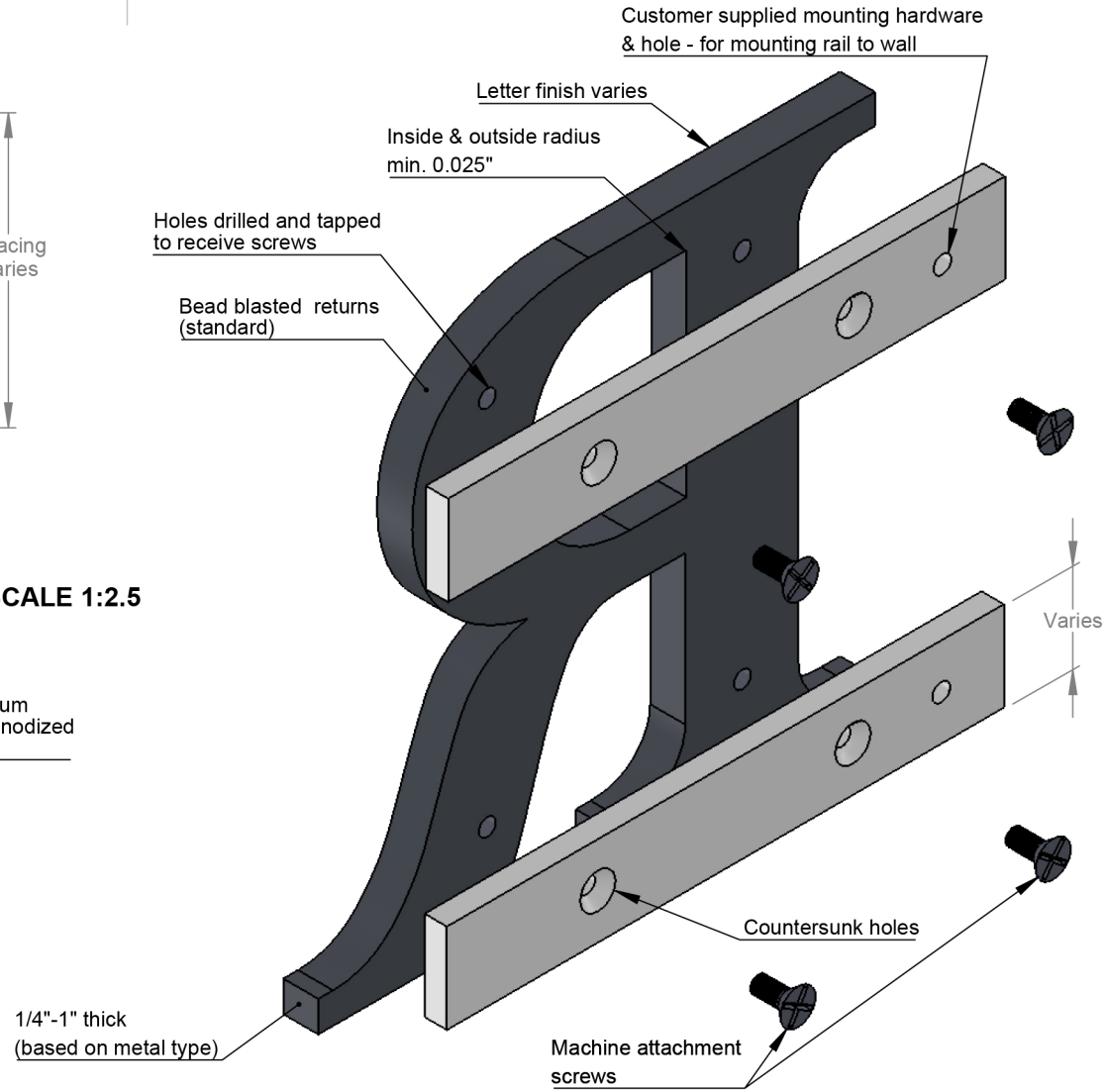

ISOMETRIC BACK VIEW II SCALE 1:1.5

NOTES:
- 4" - 24" high letters
- 10/24 or 1/4-20 stainless steel attachment screws
- Minimum 4 screws per letter (2 per rail)
- 1/4 thick aluminum rails, painted or anodized, max 95" long
  x 1/4", 1/2", 3/4" or 1" wide
- Letters mounted by word, rails pre-assembled for fit, larger letters may ship loose
- Metal rails are designed to be mounted to load bearing structures, holes and location
  to be determined by installer (rail mounting hardware & holes not included)
- Letters or logos, standard or custom

TITLE: **FLAT CUT METAL - DOUBLE RAIL MOUNT**			
MATERIAL: **METAL**		PRODUCT TYPE: **FLAT CUT METAL**	
DWG NO. FTMT40	REV 10/25/16	SCALE: AS INDICATED	SHEET 1 OF 1